Ship Sept 8 MID-ONLY

Work Order ID: 123678 *123678*

Monday, August 18, 2014 2:36:26 PM

Item ID: D3391-023 **Accept** *N900040100* **Setup Start** *NS1*

Revision ID: **Stop** *NS2*

Item Name: Mid Tube Assembly

Start Date: 8/07/14 **Start Qty:** 1.00 *1*

Required Date: 8/18/14 **Req'd Qty:** 1.00 *1*

Cust Item ID:

Customer:

Reference:

Run Start *NR1*

Stop *NR2*

Approvals: **Process Plan:** MLS **Date:** 4-08-19 **Tooling:** _____ **Date:** _____

QC: _____ **Date:** _____ **SPC (Y/N):** _____ **Date:** _____

Sequence ID/ Work Center ID	Operation Description	Set Up/ Run Hours	Tool ID	Tool #	Plan Code	Accept Qty	Reject Qty	Reject Number	Insp. Stamp
100	Skidtubes	0.00							

Draw Nbr	Revision Nbr
D3391	I

100

Skidtubes

Skidtubes

Memo 0.00

1-Cut tube to finish length as per Dwg D3391

2-Drill pilot holes using DT8796 (Do not drill "B" holes) and drill only 1 fwd saddle hole on one side only as per Dwg D3391

3-Open saddles and GHW holes to Ø0.375" exept for fwd saddle hole of detail "J"

4-Remove .030" from Fwd indexing Ridge as per Dwg D3391

5-Remove indexing ridge on Fwd & Aft end of skidtube as per Dwg D3391

6-Deburr

7-Drill #30 pilot holes using wearplate Jig DT8217 Identify Ø0.250" holes with paint marker,
***DO NOT DRILL HOLES #3-19-20 FROM FWD END OF JIG

8-Open wearplate holes of D3391-023 assembly detail section G-G to Ø0.250" (10 holes) as per Dwg D3391

9-Open wearplate holes of D3391-023 assembly detail section H-H to Ø0.297" (20 holes) as per Dwg D3391
DO NOT OPEN 2 MOST FWD WEARPLATE HOLES

BE 14-08-20

DQA: _____ Date: _____

WORK ORDER NON-CONFORMANCE / UPDATE

DART AEROSPACE

QA Closed: Date: Work Order update only ☐

Work Order: _____

Part No. _____

NCR No. _____

DISPOSITION

- Rework ☐
- Scrap ☐
- Use-as-is ☐
- Suspected Unapproved ☐

AGAINST DEPARTMENT/PROCESS

- Skid-tube ☐
- Machining ☐
- Thermoforming ☐
- Large Fab ☐
- Crosstube ☐
- Small Fab ☐
- Finishing ☐
- Composite ☐
- Water Jet ☐
- Prod. Eng. Coor. ☐
- Rec/Store/Packaging ☐
- Supplier ☐
- Engineering ☐
- Quality ☐
- Other ☐

Root Cause		Date	Step	Qty	Description of work order update or non-conformance	Initial Chief Eng	Action Description	Sign & Date	Verification	QC Inspector
Design	☐									
Doc/Data	☐									
Equip/Tooling	☐									
Handling/Pre	☐									
Material	☐									
Operator	☐									
Offset/Setup	☐									
Process	☐									
Supplier	☐									
Training	☐									
Transport	☐									
Unapproved	☐									

FAULT CATEGORY

Landing Gear

- ☐ Bending
- ☐ Centre Not Concentric
- ☐ Cracks
- ☐ Crimp/Kink/Ripple/Wave
- ☐ Cuffs
- ☐ Crushing
- ☐ Heat Treat
- ☐ Inspection Strip in Tube
- ☐ Marks/Chatter
- ☐ Turning Sequence
- ☐ Wave/Twist in Tube

General

- ☐ Bend
- ☐ BOM/Route
- ☐ Broken/Damage/Defect
- ☐ Burrs
- ☐ Contamination
- ☐ Countersink
- ☐ Cut Too Short
- ☐ Drawing
- ☐ Drill Holes
- ☐ Finish
- ☐ Fit/Function
- ☐ Folio/Program
- ☐ Grain
- ☐ Hardware
- ☐ Inspection Incomplete/Unqualified
- ☐ Instructions Incomplete/Unclear
- ☐ Misaligned/off center
- ☐ Mislabeled
- ☐ Misread
- ☐ Off-set
- ☐ Out of Calibration
- ☐ Out of Sequence
- ☐ Outside Dimensions
- ☐ Over/Under tolerance
- ☐ Part Incorrect
- ☐ Part Lost/Missing
- ☐ Part Moved
- ☐ Positioned Wrong
- ☐ Power Loss/Surge
- ☐ Pressure/Forced
- ☐ Set-up
- ☐ Temperature/Cure
- ☐ Weld
- ☐ Wrong Stock Pulled
- ☐ Other

_____

_____

_____

Item ID: D3391-023 **Accept** *N900040100* **Setup Start** *NS1*
Revision ID: **Stop** *NS2*
Item Name: Mid Tube Assembly
Start Date: 8/07/14 **Start Qty:** 1.00 *1* **Cust Item ID:**
Required Date: 8/18/14 **Req'd Qty:** 1.00 *1* **Customer:**
Reference:

Approvals: **Process Plan:** _____ **Date:** _____ **Tooling:** _____ **Date:** _____ **Run Start** *NR1*
QC: _____ **Date:** _____ **SPC (Y/N):** _____ **Date:** _____ **Stop** *NR2*

Sequence ID/ Work Center ID	Operation Description	Set Up/ Run Hours	Tool ID	Tool #	Plan Code	Accept Qty	Reject Qty	Reject Number	Insp. Stamp
	10-Open .375" holes to .438" ***do not open fwd saddle holes***		BE 14-08-20						
	11-Locate D3391-021 in D3391-023 at 9.00" (see view z-z)								
	12- Transfer drill one fwd saddle hole only to .188" dia, transfer drill all remaining fwd saddle holes using DT 8149 locating from previusly drill .188" dia hole, using t-pins and clicos to ensure perfect allingment, open up previusly tranfer drilled pilot holes in D3391-023/-021 to 0.438" dia. in D3391-021 D3391-021 BATCH:_____								
	13- Using DT8217, locating from two previusly drilled holes, drill remaining wearplate holes into D3391-021.								
	14- Locating from two fwd wearplate holes in D3391-023 drill remaining 6 wearplte holes in D3391-021 using DT8937								
	15- Open 10 wearplate holes in D3391-021 to 0.297" dia.								
	16- insert D3391-021 into D3391-23								
	17- insert T-pins into first and third fwd saddle holes								
	18- ON FIRST SIDE ONLY drill out 2nd and forth fwd saddles holes to 0.500" as per								
	19- ON 2ND SIDE ONLY ream out 2nd and forth saddle hole to 0.499".								
	20-Deburr and blow out all chips from inside tube, scribe batch # in D3391-023 at aft end.								

N/A Mid-Tube only DP 14-9-2

DP 14-9-2

DQA: _____ Date: _____

WORK ORDER NON-CONFORMANCE / UPDATE

DART AEROSPACE

QA Closed: Date: Work Order update only ☐

Work Order: _____

Part No. _____

NCR No. _____

DISPOSITION

Rework ☐
Scrap ☐
Use-as-is ☐
Suspected Unapproved ☐

AGAINST DEPARTMENT/PROCESS

Skid-tube ☐ Crosstube ☐ Water Jet ☐ Engineering ☐
Machining ☐ Small Fab ☐ Prod. Eng. Coor. ☐ Quality ☐
Thermoforming ☐ Finishing ☐ Rec/Store/Packaging ☐ Other ☐
Large Fab ☐ Composite ☐ Supplier ☐

Root Cause		Date	Step	Qty	Description of work order update or non-conformance	Initial Chief Eng	Action Description	Sign & Date	Verification	QC Inspector
Design	☐									
Doc/Data	☐									
Equip/Tooling	☐									
Handling/Pre	☐									
Material	☐									
Operator	☐									
Offset/Setup	☐									
Process	☐									
Supplier	☐									
Training	☐									
Transport	☐									
Unapproved	☐									

FAULT CATEGORY

Landing Gear

☐ Bending
☐ Centre Not Concentric
☐ Cracks
☐ Crimp/Kink/Ripple/Wave
☐ Cuffs
☐ Crushing
☐ Heat Treat
☐ Inspection Strip in Tube
☐ Marks/Chatter
☐ Turning Sequence
☐ Wave/Twist in Tube

General

☐ Bend
☐ BOM/Route
☐ Broken/Damage/Defect
☐ Burrs
☐ Contamination
☐ Countersink
☐ Cut Too Short
☐ Drawing
☐ Drill Holes
☐ Finish
☐ Fit/Function

☐ Folio/Program
☐ Grain
☐ Hardware
☐ Inspection Incomplete/Unqualified
☐ Instructions Incomplete/Unclear
☐ Misaligned/off center
☐ Mislabeled
☐ Misread
☐ Off-set
☐ Out of Calibration
☐ Out of Sequence

☐ Outside Dimensions
☐ Over/Under tolerance
☐ Part Incorrect
☐ Part Lost/Missing
☐ Part Moved
☐ Positioned Wrong
☐ Power Loss/Surge

☐ Pressure/Forced
☐ Set-up
☐ Temperature/Cure
☐ Weld
☐ Wrong Stock Pulled

☐ Other

_____
_____
_____

Work Order ID 123678

Monday, August 18, 2014 2:36:26 PM

123678

Item ID: D3391-023 **Accept** *N9000040100* **Setup Start** *NS1*

Revision ID: **Stop** *NS2*

Item Name: Mid Tube Assembly

Start Date: 8/07/14 **Start Qty:** 1.00 *1*

Required Date: 8/18/14 **Req'd Qty:** 1.00 *1*

Reference:

Cust Item ID:

Customer:

Run Start *NR1*

Stop *NR2*

Approvals: **Process Plan:** _____ **Date:** _____ **Tooling:** _____ **Date:** _____

QC: _____ **Date:** _____ **SPC (Y/N):** _____ **Date:** _____

Sequence ID/ Work Center ID	Operation Description	Set Up/ Run Hours	Tool ID	Tool #	Plan Code	Accept Qty	Reject Qty	Reject Number	Insp. Stamp
110	QC5- Inspect part completeness to step on W/O	0.00							DAS 38
110						1			14-9-2
QC	**Memo**	0.00							
Quality Control									
120	Chemical Conversion Coat per QSI005 4.1	0.00							
120						1		14-9-2	DAS 18
HandFinish	**Memo**	0.00							
Hand Finishing									
130	QC7-Inspect Chemical Conversion Coat	0.00							
130						1	Ø	14-09-02	
QC	**Memo**	0.00							
Quality Control									

DQA: _____ Date: _____

DART AEROSPACE

WORK ORDER NON-CONFORMANCE / UPDATE

QA Closed: Date: Work Order update only ☐

Work Order: _____

Part No. _____

NCR No. _____

DISPOSITION

Rework ☐
Scrap ☐
Use-as-is ☐
Suspected Unapproved ☐

AGAINST DEPARTMENT/PROCESS

Skid-tube ☐ Crosstube ☐ Water Jet ☐ Engineering ☐
Machining ☐ Small Fab ☐ Prod. Eng. Coor. ☐ Quality ☐
Thermoforming ☐ Finishing ☐ Rec/Store/Packaging ☐ Other ☐
Large Fab ☐ Composite ☐ Supplier ☐

Root Cause		Date	Step	Qty	Description of work order update or non-conformance	Initial Chief Eng	Action Description	Sign & Date	Verification	QC Inspector
Design	☐									
Doc/Data	☐									
Equip/Tooling	☐									
Handling/Pre	☐									
Material	☐									
Operator	☐									
Offset/Setup	☐									
Process	☐									
Supplier	☐									
Training •	☐									
Transport •	☐									
Unapproved	☐									

FAULT CATEGORY

Landing Gear

☐ Bending
☐ Centre Not Concentric
☐ Cracks
☐ Crimp/Kink/Ripple/Wave
☐ Cuffs
☐ Crushing
☐ Heat Treat
☐ Inspection Strip in Tube
☐ Marks/Chatter
☐ Turning Sequence
☐ Wave/Twist in Tube

General

☐ Bend
☐ BOM/Route
☐ Broken/Damage/Defect
☐ Burrs
☐ Contamination
☐ Countersink
☐ Cut Too Short
☐ Drawing
☐ Drill Holes
☐ Finish
☐ Fit/Function

☐ Folio/Program
☐ Grain
☐ Hardware
☐ Inspection Incomplete/Unqualified
☐ Instructions Incomplete/Unclear
☐ Misaligned/off center
☐ Mislabeled
☐ Misread
☐ Off-set
☐ Out of Calibration
☐ Out of Sequence

☐ Outside Dimensions
☐ Over/Under tolerance
☐ Part Incorrect
☐ Part Lost/Missing
☐ Part Moved
☐ Positioned Wrong
☐ Power Loss/Surge

☐ Pressure/Forced
☐ Set-up
☐ Temperature/Cure
☐ Weld
☐ Wrong Stock Pulled

☐ Other

_____
_____
_____

Item ID: D3391-023 **Accept** *N900040100* **Setup Start** *NS1*
Revision ID: **Stop** *NS2*
Item Name: Mid Tube Assembly
Start Date: 8/07/14 **Start Qty:** 1.00 *1* **Cust Item ID:**
Required Date: 8/18/14 **Req'd Qty:** 1.00 *1* **Customer:**
Reference:

Approvals: **Process Plan:** _____ **Date:** _____ **Tooling:** _____ **Date:** _____
QC: _____ **Date:** _____ **SPC (Y/N):** _____ **Date:** _____

Run Start *NR1*
Stop *NR2*

Sequence ID/ Work Center ID	Operation Description	Set Up/ Run Hours	Tool ID	Tool #	Plan Code	Accept Qty	Reject Qty	Reject Number	Insp. Stamp
140		0.00							
140	Skidtubes					1			14-9-2
Skidtubes	**Memo**	0.00							
Skidtubes	1-Open float bag holes as per dwg 2-C'sink float bag holes as per dwg 3- Prepare tube for welding 4-Bond web in place as per Dwg D3391 & QSI 015. Adhere for 12 hours) A/R Sikaflex exp: 14-11-20 batch#: 129457 NOTE:ENSURE WEB IS INSERTED IN AFT END OF TUBE								DAS 18 9-00
150	QC5- Inspect part completeness to step on W/O	0.00							
150						1	0	14-09-03	
QC	**Memo**	0.00							
Quality Control									

DQA: _____ Date: _____

DART AEROSPACE

WORK ORDER NON-CONFORMANCE / UPDATE

QA Closed: Date: Work Order update only ☐

Work Order: _____

Part No. _____

NCR No. _____

DISPOSITION

Rework ☐
Scrap ☐
Use-as-is ☐
Suspected Unapproved ☐

AGAINST DEPARTMENT/PROCESS

Skid-tube ☐ Crosstube ☐ Water Jet ☐ Engineering ☐
Machining ☐ Small Fab ☐ Prod. Eng. Coor. ☐ Quality ☐
Thermoforming ☐ Finishing ☐ Rec/Store/Packaging ☐ Other ☐
Large Fab ☐ Composite ☐ Supplier ☐

Root Cause		Date	Step	Qty	Description of work order update or non-conformance	Initial Chief Eng	Action Description	Sign & Date	Verification	QC Inspector
Design	☐									
Doc/Data	☐									
Equip/Tooling	☐									
Handling/Pre	☐									
Material	☐									
Operator	☐									
Offset/Setup	☐									
Process	☐									
Supplier	☐									
Training	☐									
Transport	☐									
Unapproved	☐									

FAULT CATEGORY

Landing Gear

☐ Bending
☐ Centre Not Concentric
☐ Cracks
☐ Crimp/Kink/Ripple/Wave
☐ Cuffs
☐ Crushing
☐ Heat Treat
☐ Inspection Strip in Tube
☐ Marks/Chatter
☐ Turning Sequence
☐ Wave/Twist in Tube

General

☐ Bend
☐ BOM/Route
☐ Broken/Damage/Defect
☐ Burrs
☐ Contamination
☐ Countersink
☐ Cut Too Short
☐ Drawing
☐ Drill Holes
☐ Finish
☐ Fit/Function

☐ Folio/Program
☐ Grain
☐ Hardware
☐ Inspection Incomplete/Unqualified
☐ Instructions Incomplete/Unclear
☐ Misaligned/off center
☐ Mislabeled
☐ Misread
☐ Off-set
☐ Out of Calibration
☐ Out of Sequence

☐ Outside Dimensions
☐ Over/Under tolerance
☐ Part Incorrect
☐ Part Lost/Missing
☐ Part Moved
☐ Positioned Wrong
☐ Power Loss/Surge

☐ Pressure/Forced
☐ Set-up
☐ Temperature/Cure
☐ Weld
☐ Wrong Stock Pulled

☐ Other

_____
_____
_____

Item ID: D3391-023 **Accept** *N9000040100* **Setup Start** *NS1*
Revision ID: **Stop** *NS2*
Item Name: Mid Tube Assembly
Start Date: 8/07/14 **Start Qty:** 1.00 *1* **Cust Item ID:**
Required Date: 8/18/14 **Req'd Qty:** 1.00 *1* **Customer:**
Reference:

Approvals: **Process Plan:** _____ **Date:** _____ **Tooling:** _____ **Date:** _____ **Run Start** *NR1*
QC: _____ **Date:** _____ **SPC (Y/N):** _____ **Date:** _____ **Stop** *NR2*

Sequence ID/ Work Center ID	Operation Description	Set Up/ Run Hours	Tool ID	Tool #	Plan Code	Accept Qty	Reject Qty	Reject Number	Insp. Stamp
160		0.00							
160	Skidtubes					1	0	BH 09-03	
Skidtubes	**Memo**	0.00							
Skidtubes	1-Weld crossbolt spacer as per dwg D3391 & QSI 004 AIRM129399 2-grind weld flush								
170	QC10- Inspect visual per QSI004- ground welds	0.00							DAS
170						1	14-09-03		9
QC	**Memo**	0.00							9-89
Quality Control									
180	QC5- Inspect part completeness to step on W/O	0.00							DAS
180						1	14-09-03		9
QC	**Memo**	0.00							9-89
Quality Control									

DQA: _____ Date: _____

WORK ORDER NON-CONFORMANCE / UPDATE

DART AEROSPACE

QA Closed: Date: Work Order update only ☐

Work Order: _____

Part No. _____

NCR No. _____

DISPOSITION

Rework ☐
Scrap ☐
Use-as-is ☐
Suspected Unapproved ☐

AGAINST DEPARTMENT/PROCESS

Skid-tube ☐ Crosstube ☐ Water Jet ☐ Engineering ☐
Machining ☐ Small Fab ☐ Prod. Eng. Coor. ☐ Quality ☐
Thermoforming ☐ Finishing ☐ Rec/Store/Packaging ☐ Other ☐
Large Fab ☐ Composite ☐ Supplier ☐ ☐

Root Cause		Date	Step	Qty	Description of work order update or non-conformance	Initial Chief Eng	Action Description	Sign & Date	Verification	QC Inspector
Design	☐									
Doc/Data	☐									
Equip/Tooling	☐									
Handling/Pre	☐									
Material	☐									
Operator	☐									
Offset/Setup	☐									
Process	☐									
Supplier	☐									
Training	☐									
Transport	☐									
Unapproved	☐									

FAULT CATEGORY

Landing Gear

☐ Bending
☐ Centre Not Concentric
☐ Cracks
☐ Crimp/Kink/Ripple/Wave
☐ Cuffs
☐ Crushing
☐ Heat Treat
☐ Inspection Strip in Tube
☐ Marks/Chatter
☐ Turning Sequence
☐ Wave/Twist in Tube

General

☐ Bend
☐ BOM/Route
☐ Broken/Damage/Defect
☐ Burrs
☐ Contamination
☐ Countersink
☐ Cut Too Short
☐ Drawing
☐ Drill Holes
☐ Finish
☐ Fit/Function
☐ Folio/Program
☐ Grain
☐ Hardware
☐ Inspection Incomplete/Unqualified
☐ Instructions Incomplete/Unclear
☐ Misaligned/off center
☐ Mislabeled
☐ Misread
☐ Off-set
☐ Out of Calibration
☐ Out of Sequence
☐ Outside Dimensions
☐ Over/Under tolerance
☐ Part Incorrect
☐ Part Lost/Missing
☐ Part Moved
☐ Positioned Wrong
☐ Power Loss/Surge
☐ Pressure/Forced
☐ Set-up
☐ Temperature/Cure
☐ Weld
☐ Wrong Stock Pulled
☐ Other

_____
_____
_____

Work Order ID 123678 *123678*

Monday, August 18, 2014 2:36:26 PM

Item ID: D3391-023 **Accept** *N900040100* **Setup Start** *NS1*

Revision ID:

Item Name: Mid Tube Assembly **Stop** *NS2*

Start Date: 8/07/14 **Start Qty:** 1.00 *1* **Cust Item ID:**

Required Date: 8/18/14 **Req'd Qty:** 1.00 *1* **Customer:**

Reference:

Run Start *NR1*

Approvals: **Process Plan:** _____ **Date:** _____ **Tooling:** _____ **Date:** _____

QC: _____ **Date:** _____ **SPC (Y/N):** _____ **Date:** _____ **Stop** *NR2*

Sequence ID/ Work Center ID	Operation Description	Set Up/ Run Hours	Tool ID	Tool #	Plan Code	Accept Qty	Reject Qty	Reject Number	Insp. Stamp
185 *185* HandFinish Hand Finishing	Pressure Wash per QSI005 4.3	0.00				1	HG	14-9-3	
	Memo AND REALODINE AS PER PAR09-043	0.00							
190 *190* Powdercoat Powder Coating	White Gloss(Ref:4.3.5.1) per QSI005 4.3-Alum M 128959.	0.00				1	∅	14-9-4.	DAS 34 9-89
	Memo START TIME: 1:05. OVEN TEMPERATURE: 3200 FINISH TIME: 1:05.	0.00							
200 *200* QC Quality Control	QC3- Inspect Part Finish	0.00				1x	∅	[illegible]	14/09/04 DAS 15 9-89
	Memo	0.00							

DQA: _____ Date: _____

WORK ORDER NON-CONFORMANCE / UPDATE

DART AEROSPACE

QA Closed: Date: Work Order update only ☐

Work Order: _____

Part No. _____

NCR No. _____

DISPOSITION

Rework ☐
Scrap ☐
Use-as-is ☐
Suspected Unapproved ☐

AGAINST DEPARTMENT/PROCESS

Skid-tube ☐ Crosstube ☐ Water Jet ☐ Engineering ☐
Machining ☐ Small Fab ☐ Prod. Eng. Coor. ☐ Quality ☐
Thermoforming ☐ Finishing ☐ Rec/Store/Packaging ☐ Other ☐
Large Fab ☐ Composite ☐ Supplier ☐

Root Cause		Date	Step	Qty	Description of work order update or non-conformance	Initial Chief Eng	Action Description	Sign & Date	Verification	QC Inspector
Design	☐									
Doc/Data	☐									
Equip/Tooling	☐									
Handling/Pre	☐									
Material	☐									
Operator	☐									
Offset/Setup	☐									
Process	☐									
Supplier	☐									
Training	☐									
Transport	☐									
Unapproved	☐									

FAULT CATEGORY

Landing Gear

☐ Bending
☐ Centre Not Concentric
☐ Cracks
☐ Crimp/Kink/Ripple/Wave
☐ Cuffs
☐ Crushing
☐ Heat Treat
☐ Inspection Strip in Tube
☐ Marks/Chatter
☐ Turning Sequence
☐ Wave/Twist in Tube

General

☐ Bend
☐ BOM/Route
☐ Broken/Damage/Defect
☐ Burrs
☐ Contamination
☐ Countersink
☐ Cut Too Short
☐ Drawing
☐ Drill Holes
☐ Finish
☐ Fit/Function
☐ Folio/Program
☐ Grain
☐ Hardware
☐ Inspection Incomplete/Unqualified
☐ Instructions Incomplete/Unclear
☐ Misaligned/off center
☐ Mislabeled
☐ Misread
☐ Off-set
☐ Out of Calibration
☐ Out of Sequence
☐ Outside Dimensions
☐ Over/Under tolerance
☐ Part Incorrect
☐ Part Lost/Missing
☐ Part Moved
☐ Positioned Wrong
☐ Power Loss/Surge
☐ Pressure/Forced
☐ Set-up
☐ Temperature/Cure
☐ Weld
☐ Wrong Stock Pulled
☐ Other

_____
_____
_____

Work Order ID 123678 *123678*

Monday, August 18, 2014 2:36:26 PM

Item ID: D3391-023 **Accept** *N900040100* **Setup Start** *NS1*

Revision ID:

Item Name: Mid Tube Assembly **Stop** *NS2*

Start Date: 8/07/14 **Start Qty:** 1.00 *1* **Cust Item ID:**

Required Date: 8/18/14 **Req'd Qty:** 1.00 *1* **Customer:**

Reference:

Run Start *NR1*

Approvals: **Process Plan:** _____ **Date:** _____ **Tooling:** _____ **Date:** _____

QC: _____ **Date:** _____ **SPC (Y/N):** _____ **Date:** _____ **Stop** *NR2*

Sequence ID/ Work Center ID	Operation Description	Set Up/ Run Hours	Tool ID	Tool #	Plan Code	Accept Qty	Reject Qty	Reject Number	Insp. Stamp
230 *230* HandFinish Hand Finishing	HandFinishing	0.00				1x	1	[illegible]	14/09/04
	Memo N/A X 1- press fit D3591-1 spacers using DT9416 starting from 0.500" side 2-Install Inserts as per Dwg	0.00							
240 *240* QC Quality Control	QC5- Inspect part completeness to step on W/O	0.00				1			DAS 38 9-89 14-9-5
	Memo	0.00							
250 *250* Packaging Packaging	Identify as per dwg & Stock Location:_____	0.00	Ship		DAS 06 9-89	SEP 05 2014			
	Memo	0.00							

DQA: _____ Date: _____

DART AEROSPACE

WORK ORDER NON-CONFORMANCE / UPDATE

QA Closed: Date: Work Order update only ☐

Work Order: _____

Part No. _____

NCR No. _____

DISPOSITION

Rework ☐
Scrap ☐
Use-as-is ☐
Suspected Unapproved ☐

AGAINST DEPARTMENT/PROCESS

Skid-tube ☐ Crosstube ☐ Water Jet ☐ Engineering ☐
Machining ☐ Small Fab ☐ Prod. Eng. Coor. ☐ Quality ☐
Thermoforming ☐ Finishing ☐ Rec/Store/Packaging ☐ Other ☐
Large Fab ☐ Composite ☐ Supplier ☐

Root Cause		Date	Step	Qty	Description of work order update or non-conformance	Initial Chief Eng	Action Description	Sign & Date	Verification	QC Inspector
Design	☐									
Doc/Data	☐									
Equip/Tooling	☐									
Handling/Pre	☐									
Material	☐									
Operator	☐									
Offset/Setup	☐									
Process	☐									
Supplier	☐									
Training	☐									
Transport	☐									
Unapproved	☐									

FAULT CATEGORY

Landing Gear

☐ Bending
☐ Centre Not Concentric
☐ Cracks
☐ Crimp/Kink/Ripple/Wave
☐ Cuffs
☐ Crushing
☐ Heat Treat
☐ Inspection Strip in Tube
☐ Marks/Chatter
☐ Turning Sequence
☐ Wave/Twist in Tube

General

☐ Bend
☐ BOM/Route
☐ Broken/Damage/Defect
☐ Burrs
☐ Contamination
☐ Countersink
☐ Cut Too Short
☐ Drawing
☐ Drill Holes
☐ Finish
☐ Fit/Function

☐ Folio/Program
☐ Grain
☐ Hardware
☐ Inspection Incomplete/Unqualified
☐ Instructions Incomplete/Unclear
☐ Misaligned/off center
☐ Mislabeled
☐ Misread
☐ Off-set
☐ Out of Calibration
☐ Out of Sequence

☐ Outside Dimensions
☐ Over/Under tolerance
☐ Part Incorrect
☐ Part Lost/Missing
☐ Part Moved
☐ Positioned Wrong
☐ Power Loss/Surge

☐ Pressure/Forced
☐ Set-up
☐ Temperature/Cure
☐ Weld
☐ Wrong Stock Pulled

☐ Other

_____
_____
_____

Work Order ID 123678

Monday, August 18, 2014 2:36:26 PM

123678

Item ID: D3391-023

Revision ID:

Item Name: Mid Tube Assembly

Accept *N900040100*

Setup **Start** *NS1*

Stop *NS2*

Start Date: 8/07/14 **Start Qty:** 1.00 *1*

Required Date: 8/18/14 **Req'd Qty:** 1.00 *1*

Cust Item ID:

Customer:

Reference:

Run **Start** *NR1*

Stop *NR2*

Approvals: **Process Plan:** _____ **Date:** _____ **Tooling:** _____ **Date:** _____

QC: _____ **Date:** _____ **SPC (Y/N):** _____ **Date:** _____

Sequence ID/ Work Center ID	Operation Description	Set Up/ Run Hours	Tool ID	Tool #	Plan Code	Accept Qty	Reject Qty	Reject Number	Insp. Stamp
260 *260*	QC21- Final Inspection - Work Order Release	0.00				MLJ	14-09-05		
QC Quality Control	Memo	0.00							

MLJ 14-08-05

DQA: _____ Date: _____

DART AEROSPACE

WORK ORDER NON-CONFORMANCE / UPDATE

QA Closed: Date: Work Order update only ☐

Work Order: _____

Part No. _____

NCR No. _____

DISPOSITION

- Rework ☐
- Scrap ☐
- Use-as-is ☐
- Suspected Unapproved ☐

AGAINST DEPARTMENT/PROCESS

- Skid-tube ☐
- Machining ☐
- Thermoforming ☐
- Large Fab ☐
- Crosstube ☐
- Small Fab ☐
- Finishing ☐
- Composite ☐
- Water Jet ☐
- Prod. Eng. Coor. ☐
- Rec/Store/Packaging ☐
- Supplier ☐
- Engineering ☐
- Quality ☐
- Other ☐

Root Cause		Date	Step	Qty	Description of work order update or non-conformance	Initial Chief Eng	Action Description	Sign & Date	Verification	QC Inspector
Design	☐									
Doc/Data	☐									
Equip/Tooling	☐									
Handling/Pre	☐									
Material	☐									
Operator	☐									
Offset/Setup	☐									
Process	☐									
Supplier	☐									
Training	☐									
Transport	☐									
Unapproved	☐									

FAULT CATEGORY

Landing Gear

- ☐ Bending
- ☐ Centre Not Concentric
- ☐ Cracks
- ☐ Crimp/Kink/Ripple/Wave
- ☐ Cuffs
- ☐ Crushing
- ☐ Heat Treat
- ☐ Inspection Strip in Tube
- ☐ Marks/Chatter
- ☐ Turning Sequence
- ☐ Wave/Twist in Tube

General

- ☐ Bend
- ☐ BOM/Route
- ☐ Broken/Damage/Defect
- ☐ Burrs
- ☐ Contamination
- ☐ Countersink
- ☐ Cut Too Short
- ☐ Drawing
- ☐ Drill Holes
- ☐ Finish
- ☐ Fit/Function
- ☐ Folio/Program
- ☐ Grain
- ☐ Hardware
- ☐ Inspection Incomplete/Unqualified
- ☐ Instructions Incomplete/Unclear
- ☐ Misaligned/off center
- ☐ Mislabeled
- ☐ Misread
- ☐ Off-set
- ☐ Out of Calibration
- ☐ Out of Sequence
- ☐ Outside Dimensions
- ☐ Over/Under tolerance
- ☐ Part Incorrect
- ☐ Part Lost/Missing
- ☐ Part Moved
- ☐ Positioned Wrong
- ☐ Power Loss/Surge
- ☐ Pressure/Forced
- ☐ Set-up
- ☐ Temperature/Cure
- ☐ Weld
- ☐ Wrong Stock Pulled
- ☐ Other

_____

_____

_____

Picklist Print

Monday, August 18, 2014 2:36:25 PM

Work Order ID: 123678 *123678*

Parent Item: D3391-023 *D3391-023*

Parent Item Name: Mid Tube Assembly

Start Date: 8/07/14 **Required Date:** 8/18/14

Start Qty: 1.00 **Required Qty:** 1.00

Comments:

IPP A05.10.20New Issue KJ/EC
IPP B06.02.10ECN773 dwg rev.D EC
IPP C 07.03.20 rev F dwg EC
IPP D 07.03.28 re-format EC
IPP E 07.10.31 ecn 1053P EC
IPP Rev:F ECN 1056 07-11-13 DD verified by: EC
IPP Rev:G 08-09-08 new process (ecn 08-510) DD verified by:EC
IPP Rev:H 08-09-10 revH as per dwg DD verified by:EC
IPP Rev: I 08-11-13 Removed steps per w/o, QC KJ verified by: ec IPP
Rev:J add in seq 140 expire date &b# sikaflex DD 10.02.17 verified by:EC

Component Item ID/ Item Name	Replacement Item ID	Mfg/ Purch	Bin Item	Primary Location	Last Location	Route Seq ID	Unit of Measure	Qty on Hand	Qty per Kit	Total Qty	Qty Issued	Date Issued	Status
D2500-1-100		Manufactured	No			100	Each	64.0000	1	1			
D2500-1-100									**			8-20	
Skidtube Extrusion													
				Location			**Loc Qty**		**Loc Code**				
				HALL			64						
					82373		14			1			
					86065		50						
D3389-1		Manufactured	No			140	Each	9.0000	1	1			
D3389-1									**				
Web													
				Location			**Loc Qty**		**Loc Code**				
				LG			9						
					115652		9			0		14-9-22	
D3681-1		Manufactured	No			160	Each	50.0000	5	5			
D3681-1									**			8-14-09-03	
Spacer													
				Location			**Loc Qty**		**Loc Code**				
				LG001			50						
					114884		42			5			
					118999		8						

DQA: _____ Date: _____

DART AEROSPACE

WORK ORDER NON-CONFORMANCE / UPDATE

QA Closed: Date: Work Order update only ☐

Work Order: _____

Part No. _____

NCR No. _____

DISPOSITION

Rework ☐
Scrap ☐
Use-as-is ☐
Suspected Unapproved ☐

AGAINST DEPARTMENT/PROCESS

Skid-tube ☐ Crosstube ☐ Water Jet ☐ Engineering ☐
Machining ☐ Small Fab ☐ Prod. Eng. Coor. ☐ Quality ☐
Thermoforming ☐ Finishing ☐ Rec/Store/Packaging ☐ Other ☐
Large Fab ☐ Composite ☐ Supplier ☐

Root Cause		Date	Step	Qty	Description of work order update or non-conformance	Initial Chief Eng	Action Description	Sign & Date	Verification	QC Inspector
Design	☐									
Doc/Data	☐									
Equip/Tooling	☐									
Handling/Pre	☐									
Material	☐									
Operator	☐									
Offset/Setup	☐									
Process	☐									
Supplier	☐									
Training	☐									
Transport	☐									
Unapproved	☐									

FAULT CATEGORY

Landing Gear

☐ Bending
☐ Centre Not Concentric
☐ Cracks
☐ Crimp/Kink/Ripple/Wave
☐ Cuffs
☐ Crushing
☐ Heat Treat
☐ Inspection Strip in Tube
☐ Marks/Chatter
☐ Turning Sequence
☐ Wave/Twist in Tube

General

☐ Bend
☐ BOM/Route
☐ Broken/Damage/Defect
☐ Burrs
☐ Contamination
☐ Countersink
☐ Cut Too Short
☐ Drawing
☐ Drill Holes
☐ Finish
☐ Fit/Function

☐ Folio/Program
☐ Grain
☐ Hardware
☐ Inspection Incomplete/Unqualified
☐ Instructions Incomplete/Unclear
☐ Misaligned/off center
☐ Mislabeled
☐ Misread
☐ Off-set
☐ Out of Calibration
☐ Out of Sequence

☐ Outside Dimensions
☐ Over/Under tolerance
☐ Part Incorrect
☐ Part Lost/Missing
☐ Part Moved
☐ Positioned Wrong
☐ Power Loss/Surge

☐ Pressure/Forced
☐ Set-up
☐ Temperature/Cure
☐ Weld
☐ Wrong Stock Pulled

☐ Other

_____
_____
_____

Picklist Print

Monday, August 18, 2014 2:36:25 PM

Work Order ID: 123678 *123678*

Parent Item: D3391-023 *D3391-023*

Parent Item Name: Mid Tube Assembly

Start Date: 8/07/14 **Required Date:** 8/18/14

Start Qty: 1.00 **Required Qty:** 1.00

D3591-1 Manufactured No Each 94.0000 2

D3591-1 ** N/A DAS 10 9-89

Bushing

DAS 10 9-89

Location		Loc Qty	Loc Code
FG		10	
	115645	4	
	92873	6	
FP		84	
	115533	58	
	121446	26	

ALS4-1032-130 AELS4-1032-130 Purchased No 230 Each 4,811.000 20 20

ALS4-1032-130 ** [illegible] 14/09/04

Rivnut

Location		Loc Qty	Loc Code
ST267		4811	
	M126109	57	
	M128211	48	
	M128649	4706	x20

1x D4095-045 / B115940 wearplate

12x AN3C-4A / M129520 bolts

12x NAS1149C0332R / M127410 washers

[illegible] 14/09/04

DQA: _____ Date: _____

DART AEROSPACE

WORK ORDER NON-CONFORMANCE / UPDATE

QA Closed: Date: Work Order update only ☐

Work Order: _____

Part No. _____

NCR No. _____

DISPOSITION

- Rework ☐
- Scrap ☐
- Use-as-is ☐
- Suspected Unapproved ☐

AGAINST DEPARTMENT/PROCESS

- Skid-tube ☐
- Machining ☐
- Thermoforming ☐
- Large Fab ☐
- Crosstube ☐
- Small Fab ☐
- Finishing ☐
- Composite ☐
- Water Jet ☐
- Prod. Eng. Coor. ☐
- Rec/Store/Packaging ☐
- Supplier ☐
- Engineering ☐
- Quality ☐
- Other ☐

Root Cause		Date	Step	Qty	Description of work order update or non-conformance	Initial Chief Eng	Action Description	Sign & Date	Verification	QC Inspector
Design	☐									
Doc/Data	☐									
Equip/Tooling	☐									
Handling/Pre	☐									
Material	☐									
Operator	☐									
Offset/Setup	☐									
Process	☐									
Supplier	☐									
Training	☐									
Transport	☐									
Unapproved	☐									

FAULT CATEGORY

Landing Gear

- ☐ Bending
- ☐ Centre Not Concentric
- ☐ Cracks
- ☐ Crimp/Kink/Ripple/Wave
- ☐ Cuffs
- ☐ Crushing
- ☐ Heat Treat
- ☐ Inspection Strip in Tube
- ☐ Marks/Chatter
- ☐ Turning Sequence
- ☐ Wave/Twist in Tube

General

- ☐ Bend
- ☐ BOM/Route
- ☐ Broken/Damage/Defect
- ☐ Burrs
- ☐ Contamination
- ☐ Countersink
- ☐ Cut Too Short
- ☐ Drawing
- ☐ Drill Holes
- ☐ Finish
- ☐ Fit/Function
- ☐ Folio/Program
- ☐ Grain
- ☐ Hardware
- ☐ Inspection Incomplete/Unqualified
- ☐ Instructions Incomplete/Unclear
- ☐ Misaligned/off center
- ☐ Mislabeled
- ☐ Misread
- ☐ Off-set
- ☐ Out of Calibration
- ☐ Out of Sequence
- ☐ Outside Dimensions
- ☐ Over/Under tolerance
- ☐ Part Incorrect
- ☐ Part Lost/Missing
- ☐ Part Moved
- ☐ Positioned Wrong
- ☐ Power Loss/Surge
- ☐ Pressure/Forced
- ☐ Set-up
- ☐ Temperature/Cure
- ☐ Weld
- ☐ Wrong Stock Pulled
- ☐ Other

_____

_____

_____

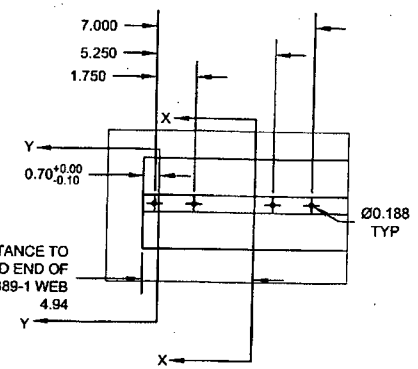

DETAIL J
SCALE 4X

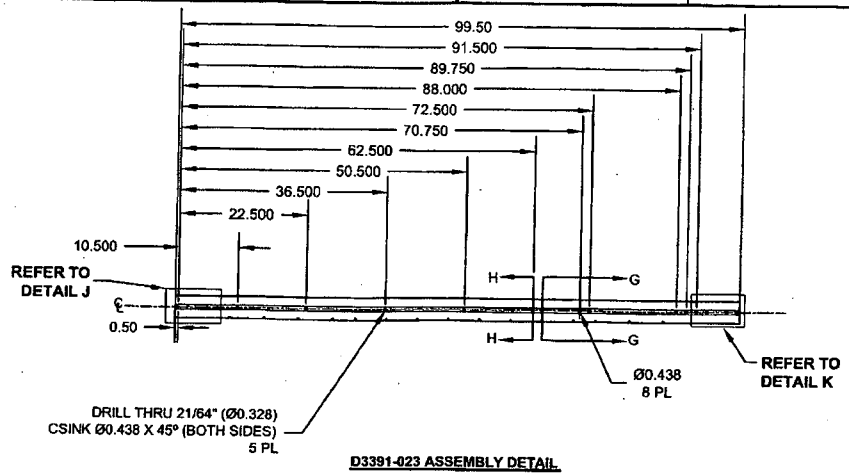

D3391-023 ASSEMBLY DETAIL

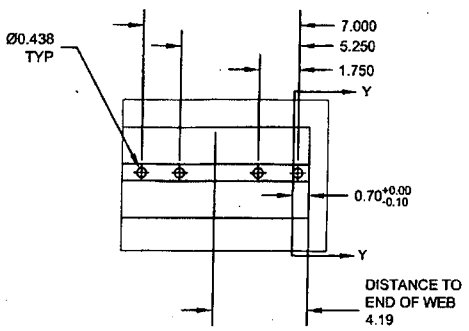

DETAIL K
SCALE 4X

SECTION G-G
SCALE 5X

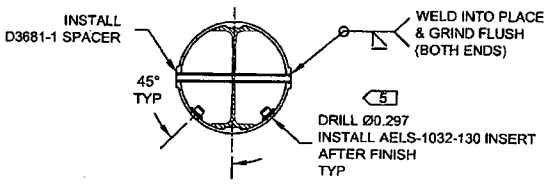

SECTION H-H
SCALE 5X
5 PL

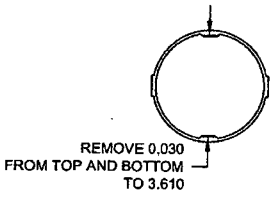

SECTION X-X
SCALE 5X

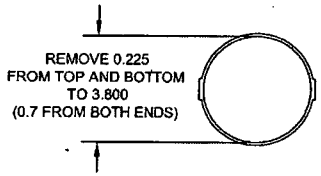

SECTION Y-Y
SCALE 5X

D3391-023 MID TUBE ASSEMBLY PARTS LIST

QTY - 023	PART NUMBER	DESCRIPTION
X	D3391-023	MID TUBE ASSEMBLY
1	D2500-1-100	EXTRUSION
1	D3389-1	WEB
5	D3681-1	SPACER
20	AELS-1032-130	INSERT

D3391-023 MID TUBE ASSEMBLY

1) MATERIAL: MAKE FROM D2500-1-100 EXTRUSION
2) INSTALL D3389-1 WEB TO OUTER TUBE USING SIKAFLEX-241/-291 PER QSI 015
3) WELDING: PER DART QSI 004

SHOP COPY
RETURN TO
ENGINEERING
UNCONTROLLED COPY
SUBJECT TO AMENDMENT
WITHOUT NOTICE
WORK ORDER
NO 123678 MCS
14-08-19

RELEASED
2011-11-04

DESIGN	PH	DART AEROSPACE USA, INC
DRAWN	XDF	KENT, WA
CHECKED		DRAWING NO. REV. I
MFG. APPR.		D3391 SHEET 6 OF 8
APPROVED		TITLE SCALE
DE APPR.		412 FLOAT SKIDTUBE NTS
DATE	11.10.13	

COPYRIGHT © 2005 BY DART AEROSPACE USA, INC
THIS DOCUMENT IS PRIVATE AND CONFIDENTIAL AND IS SUPPLIED ON THE EXPRESS CONDITION THAT IT IS NOT TO BE USED FOR ANY PURPOSE OR COPIED OR COMMUNICATED TO ANY OTHER PERSON WITHOUT WRITTEN PERMISSION FROM DART AEROSPACE USA, INC.

DQA: _____ Date: _____

WORK ORDER NON-CONFORMANCE / UPDATE

DART AEROSPACE

QA Closed: Date: Work Order update only ☐

Work Order: _____

Part No. _____

NCR No. _____

DISPOSITION

Rework ☐
Scrap ☐
Use-as-is ☐
Suspected Unapproved ☐

AGAINST DEPARTMENT/PROCESS

Skid-tube ☐ Crosstube ☐ Water Jet ☐ Engineering ☐
Machining ☐ Small Fab ☐ Prod. Eng. Coor. ☐ Quality ☐
Thermoforming ☐ Finishing ☐ Rec/Store/Packaging ☐ Other ☐
Large Fab ☐ Composite ☐ Supplier ☐

Root Cause		Date	Step	Qty	Description of work order update or non-conformance	Initial Chief Eng	Action Description	Sign & Date	Verification	QC Inspector
Design	☐									
Doc/Data	☐									
Equip/Tooling	☐									
Handling/Pre	☐									
Material	☐									
Operator	☐									
Offset/Setup	☐									
Process	☐									
Supplier	☐									
Training	☐									
Transport	☐									
Unapproved	☐									

FAULT CATEGORY

Landing Gear

☐ Bending
☐ Centre Not Concentric
☐ Cracks
☐ Crimp/Kink/Ripple/Wave
☐ Cuffs
☐ Crushing
☐ Heat Treat
☐ Inspection Strip in Tube
☐ Marks/Chatter
☐ Turning Sequence
☐ Wave/Twist in Tube

General

☐ Bend
☐ BOM/Route
☐ Broken/Damage/Defect
☐ Burrs
☐ Contamination
☐ Countersink
☐ Cut Too Short
☐ Drawing
☐ Drill Holes
☐ Finish
☐ Fit/Function
☐ Folio/Program
☐ Grain
☐ Hardware
☐ Inspection Incomplete/Unqualified
☐ Instructions Incomplete/Unclear
☐ Misaligned/off center
☐ Mislabeled
☐ Misread
☐ Off-set
☐ Out of Calibration
☐ Out of Sequence
☐ Outside Dimensions
☐ Over/Under tolerance
☐ Part Incorrect
☐ Part Lost/Missing
☐ Part Moved
☐ Positioned Wrong
☐ Power Loss/Surge
☐ Pressure/Forced
☐ Set-up
☐ Temperature/Cure
☐ Weld
☐ Wrong Stock Pulled
☐ Other

_____
_____
_____